MOUNTING HAND GRIP OKO WC

	component	quantity
	hand grip Oko	2 pcs
	inner plate	2 pcs
	magnetic insert	2 pcs
	screw M4×80 mm	4 pcs
	demounting adhesive tape	1 pc

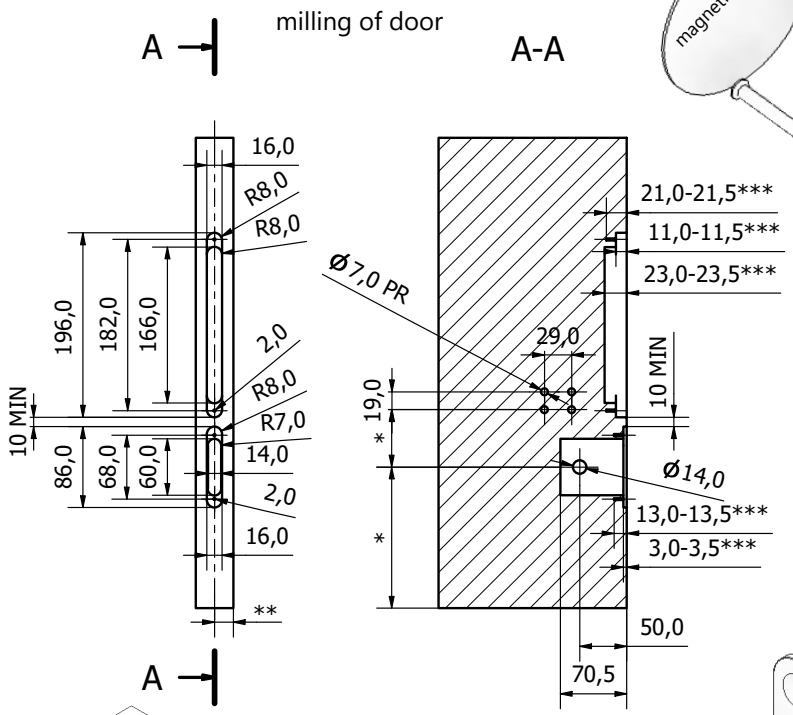

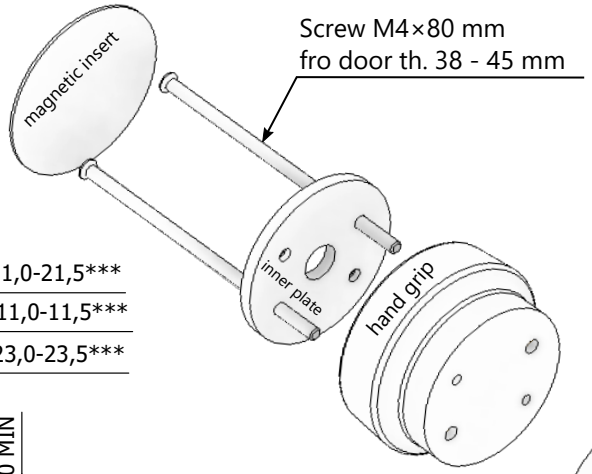

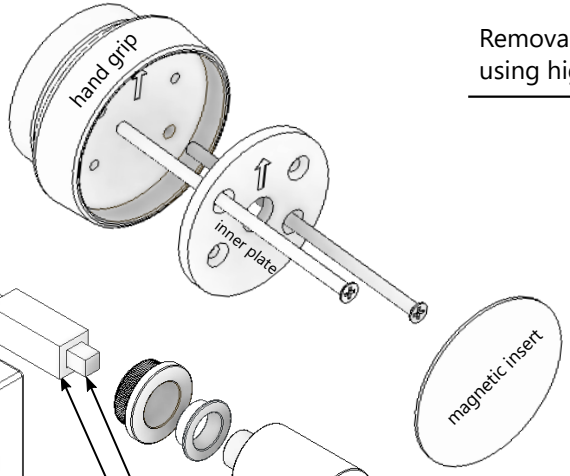

Removal of the inner magnetic insert using high-quality adhesive tape

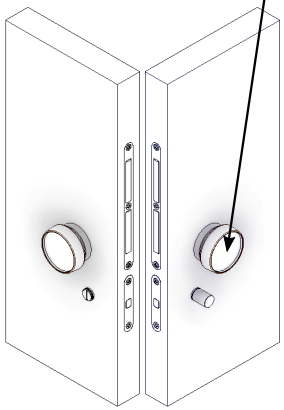

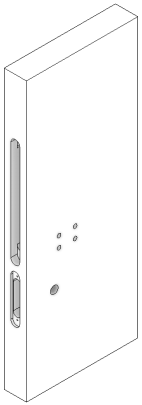

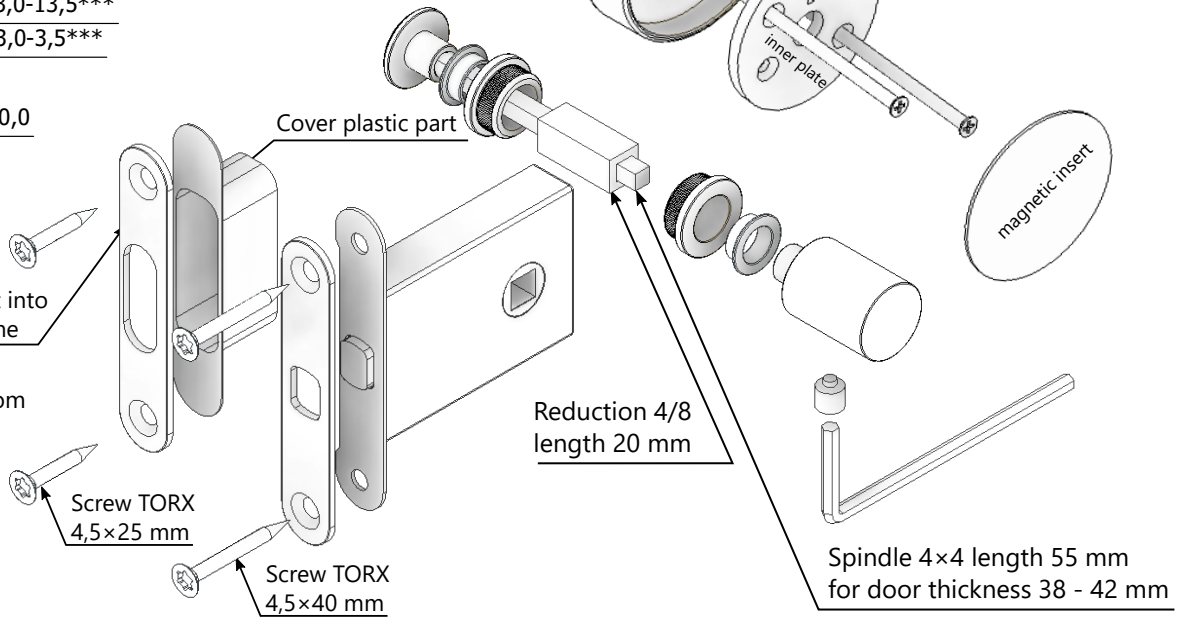

* according to the door manufacturer's custom
** fitting / positioning of the Magnetic block in the door must be solved following the seating of the Magnetic in the doorframe
*** placing of the magnetic block face according to the door manufacturer's custom